(Alpha 608B)

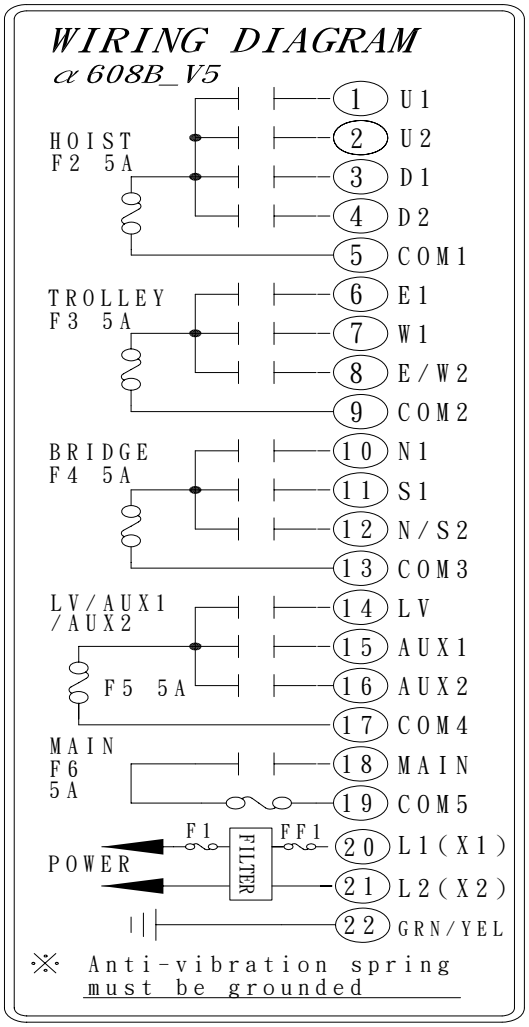
WIRING DIAGRAM
α 608B_V5
HOIST
F2 5A
TROLLEY
F3 5A
BRIDGE
F4 5A
LV/AUX1
/AUX2
F5 5A
MAIN
F6
5A
POWER
F1
FF1
FILTER
1 U1
2 U2
3 D1
4 D2
5 COM1
6 E1
7 W1
8 E/W2
9 COM2
10 N1
11 S1
12 N/S2
13 COM3
14 LV
15 AUX1
16 AUX2
17 COM4
18 MAIN
19 COM5
20 L1(X1)
21 L2(X2)
22 GRN/YEL
※ Anti-vibration spring
must be grounded